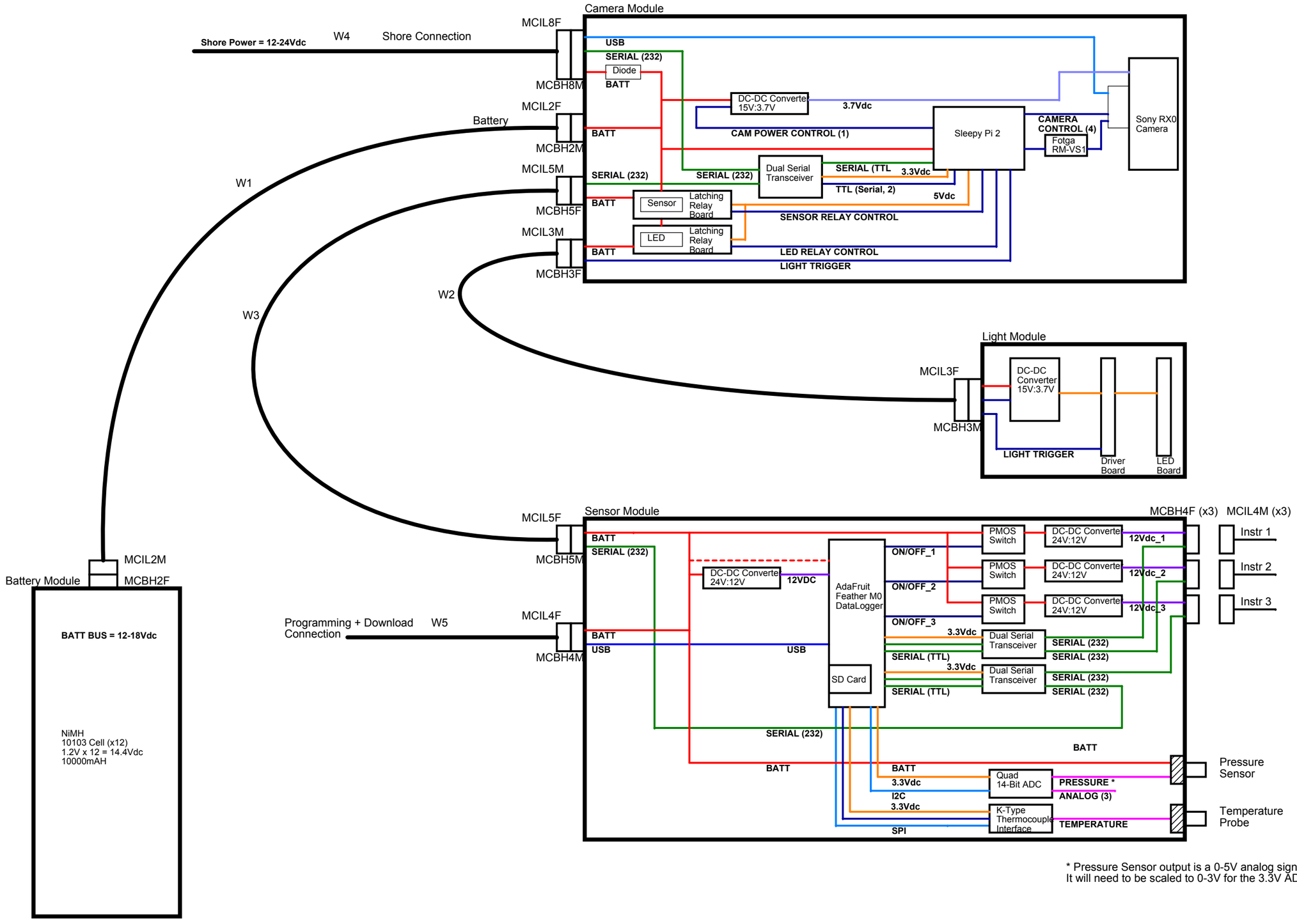

* Pressure Sensor output is a 0-5V analog signal.
It will need to be scaled to 0-3V for the 3.3V ADC.

MONTEREY BAY AQUARIUM RESEARCH INSTITUTE
7700 SANDHOLDT ROAD
MOSS LANDING, CA 95039
(831) 775-1700 www.mbari.org

Copyright MBARI 2000

Title: SeeStar III System Block Diagram - RX0				Number
Size: C	Engineer: Chad Kecy	Layout: <Layout Eng.>	Filename: <Filename>	Rev: B
	Date: Wednesday, December 20, 2017	Sheet 1 of 1		